Variable Frequency Drive

FD-100

Features :

- V/f Control
- Automatic voltage regulation
- Overload capacity:
  G type - 150% rated current for 1 min.
  P type - 120% rated current for 1 min.
- PI Control
- Provides protection against Over voltage, Under voltage, Over current and Short Circuit
- MODBUS RTU Protocol over RS485 communication

Specifications

Power supply	
Rated input voltage / Frequency	Single phase 220 V 50 / 60 Hz, 3 Phase 415 V 50 / 60 Hz
Permissible voltage fluctuation	187 V to 253 V for 1 phase & 320 to 460 V for 3 phase
Permissible frequency fluctuation	±5%
Control characteristic	
Control mode	Space vector SVPWM and Flux vector control
Frequency control range	0.1 ~ 400.0 Hz
Frequency accuracy	Digital setting 0.01%, Analog instruction 0.1% (Max frequency)
Frequency resolution	Digital instruction 0.1 Hz, Analog instruction 0.1 Hz
Accelerated / Decelerated time	0.1 ~ 3600.0 Sec. Four accelerate / decelerate time settings available
Multi speed running	Max 7 multi-stage speed running via. built in PLC and control terminals
Built-in PI	Easy to set up a simple automatic control system
Built-in counter	Automatically controlled production line can be achieved
Overload capacity	G Type - 150% rated current for 1 min. P Type - 120% rated current for 1 min
Braking torque	About 20% (With brake resistor is about 150%)
V/f mode	3 Preset V/f mode and V/f program
Automatic energy saving operation	Changes the V/f curve according to the load to save energy
Automatic voltage regulation	Regulates the voltage automatically whenever there is a change in grid voltage
Operation function	
Operation commands	Keypad and external terminals
Frequency setting	Digital setting, Analog voltage setting, Analog current setting
Input signal	Forward / Reverse, Jogging selection, Multi speed control, Regular stopping
Output signal	Fault alarm output (250 V / 2 A Contact), Open collector output
Protection functions	Over current, Over voltage, Under voltage, Over heat, Overload
Display	Parameters setting, Running status and Fault display
Operating conditions	
Operating environment	Temperature: -10°C ~ +50°C, Humidity: < 90%, No condensation, IP20
Operations area	Indoor, <1000m altitude above sea level
Storage temperature	-20°C ~ +60°C
Vibration	<5.9 m/s^2 (0.6g)

Dimensions

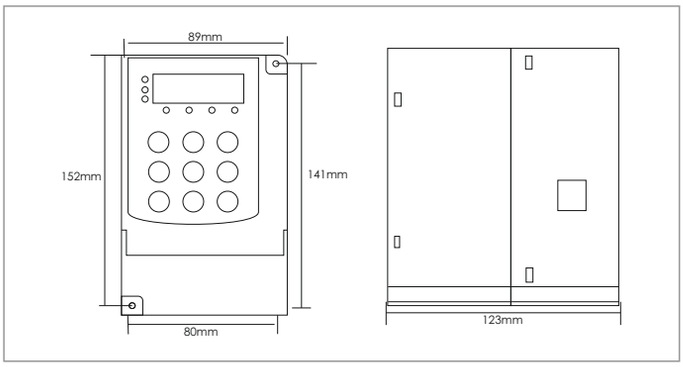

Product Code	Mounting dimension		Dimension			Pore diameter	Weight
	length (mm)	wide (mm)	length (mm)	wide (mm)	depth (mm)	(mm)	(kg)
FD100-1-010-C-CE	141	80.5	152	89	123	ϕ5.2	1.2
FD100-1-020-C-CE							
FD100-1-030-C-CE							
FD100-3-010-C-CE							
FD100-3-020-C-CE							
FD100-3-030-C-CE							
FD100-3-050-C-CE							
1 HP ~ 3HP Keyboard installation dimension : Length = 115mm, Width = 85mm							

FD100 control loop terminal instruction

Class	Sign	Terminal name	Terminal instruction and factory reset
Multi-functional inputs	X1	Multifunction input terminal 1	Default : Forward rotate / Stop
	X2	Multifunction input terminal 2	Default : Reserve rotate / Stop
	X3	Multifunction input terminal 3	Default : External fault input
	X4	Multifunction input terminal 4	Default : Multi-Step & Speed mode 1
	X5	Multifunction input terminal 5	Default : Multi-Step & Speed mode 2
	COM	Common terminal	Multi-functional input common terminal +24V Power reference ground
Analog input	AI1	Analog input 1	0~10 V input
	AI2	Analog input 2	0~10 V input or 0~20 mA input (J3 switch for selection)
	+10V	Analog preset power source	+10V DC 10 mA (Potentiometer 3~5 kΩ)
	GND	Analog ground for reference	Analog input, Output reference ground
Multi-functional output	Y1	Multifunction output terminal 1	Default : Running status
	ROA	Relay output ROA - ROB Normally closed ROA - ROC Normally open	Default : Fault output
	ROB		
	ROC		
Analog output	AO	Analog output terminal	0~10 V or 0~20 mA output (J4 Switch for selection) GND as reference ground
Analog output	+24V	+24V power supply	+24V DC 100 mA. COM is power ground
Communication	485+	RS 485 Positive terminal	RS485 Communication with Modbus protocol
	485-	RS 485 Negative terminal	

3-2-1 Standard wiring diagram for FD100

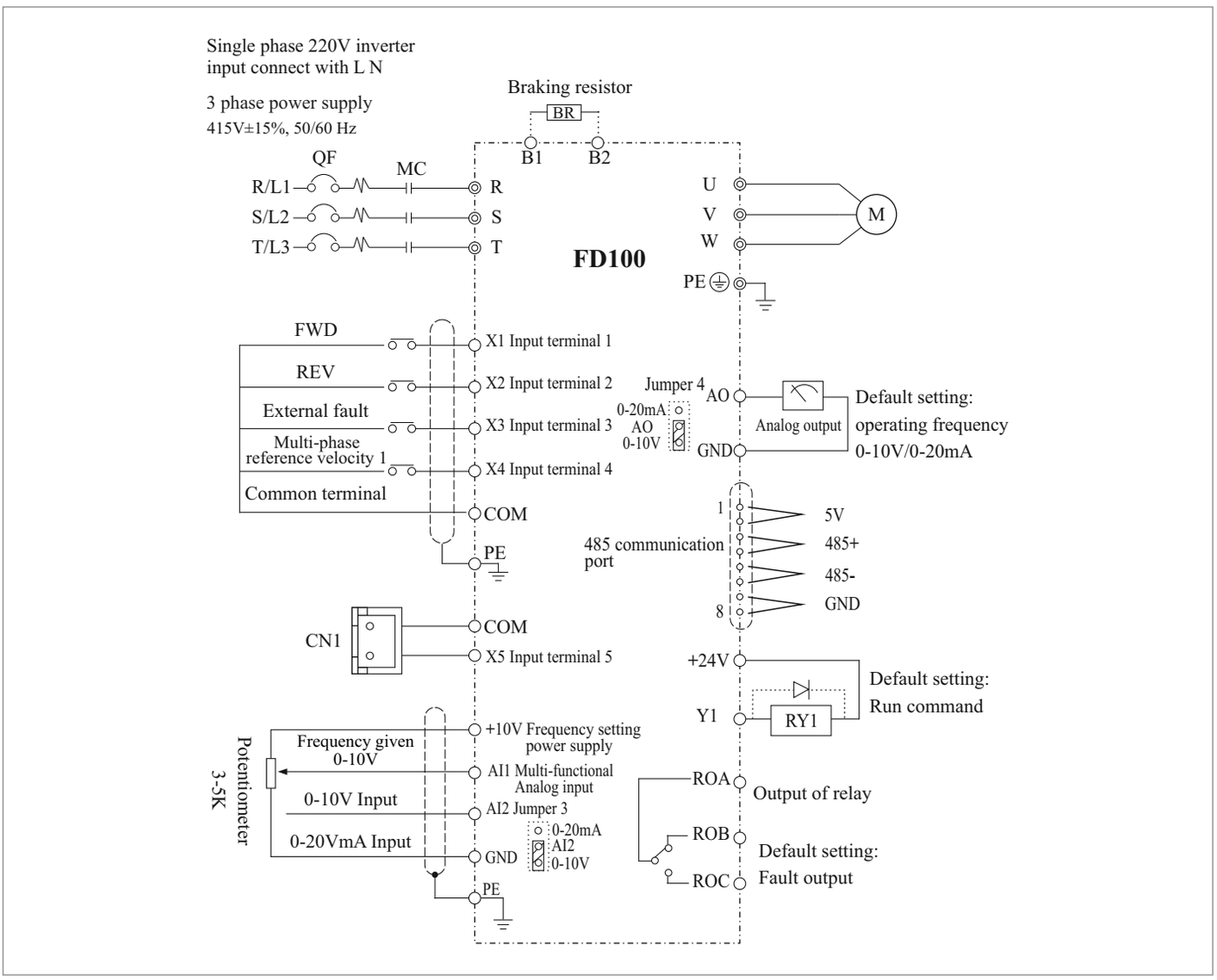

Ordering information

Product Code	Description	Output current	Certification
FD100-1-010-C-CE	1 Phase 220 V, 1 HP / 0.75 kW	5 A	CE
FD100-1-020-C-CE	1 Phase 220 V, 2 HP / 1.5 kW	7 A	CE
FD100-1-030-C-CE	1 Phase 220 V, 3 HP / 2.2 kW	11 A	CE
FD100-3-010-C-CE	3 Phase 415 V, 1 HP / 0.75 kW	2.5 A	CE
FD100-3-020-C-CE	3 Phase 415 V, 2 HP / 1.5 kW	3.7 A	CE
FD100-3-030-C-CE	3 Phase 415 V, 3 HP / 2.2 kW	5.1 A	CE
FD100-3-050-C-CE	3 Phase 415 V, 5 HP / 3.7 kW	9 A	CE

Applications :

Suitable for Fans, Pumps, Conveyor, Food & drink packaging machinery, Industrial washing machine and most general industries, Etc.

Pobrano z:https://automatyka-sklep.eu/falownik-fd100-fd100-1-010-c-ce-selec-1-fazowy-o-mocy-0-75-kw