Miniature optical	2400 / 2420 (shaft / hollow shaft)	Push-pull, RS422

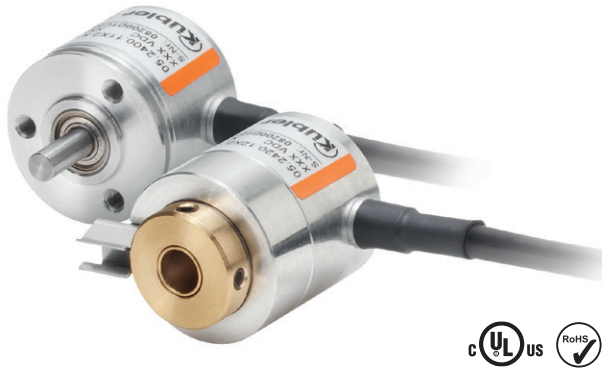

The incremental miniature encoders type 2400 / 2420 with their optical sensor technology offer a resolution of up to 1024 pulses per revolution.

With a diameter of just 24 mm this encoder is ideal for use where space is tight.

High rotational speed | Temperature range | Shock / vibration resistant | Short-circuit proof | Magnetic field proof | Optical sensor

Reliable

- Robust bearing construction.
- Cable outlet boasts high degree of strain relief thanks to multiple clamping.
- Short-circuit proof outputs.

Versatile

- Ideally suited for use in small devices.

Order code Shaft version

05.2400	.	X	X	X	X	.	XXXX
Type		a	b	c	d		e

If for each parameter of an encoder the **underlined preferred option** is selected, then the delivery time will be 10 working days for a maximum of 10 pieces. Qts. up to 50 pcs. of these types generally have a delivery time of 15 working days.

10 by 10

a *Flange*
1 = ø 24 mm [0.94“]
3 = ø 28 mm [1.10“]
2 = ø 30 mm [1.18“]

b *Shaft (ø x L)*
1 = ø 4 x 10 mm [0.16 x 0.39“]
3 = ø 5 x 10 mm [0.20 x 0.39“], with flat
2 = ø 6 x 10 mm [0.24 x 0.39“]

4 = ø 1/4“ x 10 mm [1/4“ x 0.39“], with flat [1)]
6 = ø 6 x 10 mm [0.24 x 0.39“], with flat [1)]

c *Output circuit / supply voltage*
1 = push-pull (without inverted signal) / 5 ... 24 V DC
2 = push-pull (with inverted signal) / 5 ... 24 V DC
3 = push-pull (without inverted signal) / 8 ... 30 V DC
4 = push-pull (with inverted signal) / 8 ... 30 V DC
6 = RS422 (with inverted signal) / 5 V DC

d *Type of connection*
1 = axial cable, 2 m [6.56’] PVC
A = axial cable, special length PVC *)
2 = radial cable, 2 m [6.56’] PVC
B = radial cable, special length PVC *)

*) Available special lengths (connection types A, B): 3, 5, 8, 10, 15 m [9.84, 16.40, 26.25, 32.80, 49.21’] order code expansion .XXXX = length in dm ex.: 05.2400.122A.1024.0030 (for cable length 3 m)

e *Pulse rate*
4, 6, 8, 10, 16, 20, 25, 36, 40, 50, 60, 80, **100**, 120, 125, 180, **200**, 250, 300, **360**, 400, **500**, 512, **1000**, **1024**
(e.g. 360 pulses => 0360)

Optional on request
- other pulse rates

Miniature optical	2400 / 2420 (shaft / hollow shaft)	Push-pull, RS422

Order code Hollow shaft

05.2420	.	1	X	X	X	.	XXXX
Type		a	b	c	d		e

If for each parameter of an encoder the **underlined preferred option** is selected, then the delivery time will be 10 working days for a maximum of 10 pieces. Qts. up to 50 pcs. of these types generally have a delivery time of 15 working days.

10 by 10

a *Flange*
1 = ø 24 mm [0.94“]

b *Blind hollow shaft*
(insertion depth max. 14 mm [0.55“])
1 = ø 4 mm [0.16“]
2 = ø 6 mm [0.24“]

4 = ø 1/4“ [1)]

c *Output circuit / supply voltage*
1 = push-pull (without inverted signal) / 5 ... 24 V DC
2 = push-pull (with inverted signal) / 5 ... 24 V DC
3 = push-pull (without inverted signal) / 8 ... 30 V DC
4 = push-pull (with inverted signal) / 8 ... 30 V DC
6 = RS422 (with inverted signal) / 5 V DC

d *Type of connection*
1 = axial cable, 2 m [6.56‘] PVC
A = axial cable, special length PVC *)
2 = radial cable, 2 m [6.56‘] PVC
B = radial cable, special length PVC *)

*) Available special lengths (connection types A, B):
3, 5, 8, 10, 15 m [9.84, 16.40, 26.25, 32.80, 49.21‘]
order code expansion .XXXX = length in dm
ex.: 05.2420.122A.1024.0030 (for cable length 3 m)

e *Pulse rate*
4, 6, 8, 10, 16, 20, 25, 36, 40, 50, 60, 80, **100**, 120, 125, 180, **200**, 250, 300, **360**, 400, **500**, 512, **1000**, **1024**
(e.g. 360 pulses => 0360)

Optional on request
- other pulse rates

Mounting accessory for shaft encoders		Order no.
Coupling	bellows coupling ø 15 mm [0.59“] for shaft 4 mm [0.16“]	**8.0000.1202.0404**

Miniature optical	2400 / 2420 (shaft / hollow shaft)	Push-pull, RS422

Technical data

Mechanical characteristics

Maximum speed		12000 min^{-1}
Mass moment of inertia		approx. 0.1 x 10^{-6} kgm^2
Starting torque – at 20 °C [68 °F]		< 0.01 Nm [3]
Shaft load capacity	radial	20 N
	axial	10 N
Weight		approx. 0.06 kg [2.12 oz]
Protection acc. to EN 60529		
	housing side	IP65
	flange side	IP50 (IP64 on request)
Working temperature range		-20 °C ... +85 °C [-4 °F ... +185 °F]
Materials	shaft	stainless steel
	blind hollow shaft	brass
Shock resistance acc. to EN 60068-2-27		1000 m/s^2, 6 ms
Vibration resistance acc. to EN 60068-2-6		100 m/s^2, 55 ... 2000 Hz

Approvals

UL compliant in accordance with	File no. E224618
CE compliant in accordance with	
EMC Directive	2014/30/EU
RoHS Directive	2011/65/EU

Electrical characteristics

Output circuit		**Push-pull** [1] (7272 compatible)	**Push-pull** [1] (7272 compatible)	**RS422** (TTL compatible)
Supply voltage		5 ... 24 V DC [2]	8 ... 30 V DC	5 V DC (±5 %)
Power consumption (no load)		max. 50 mA	max. 50 mA	max. 90 mA
Permissible load / channel		max. +/- 50 mA	max. +/- 50 mA	max. +/- 20 mA
Pulse frequency		max. 160 kHz	max. 160 kHz	max. 300 kHz
Signal level	HIGH	min. +V - 2.5 V	min. +V - 3.0 V	min. 2.5 V
	LOW	max. 0.5 V	max. 0.5 V	max. 0.5 V
Rising edge time t_r		max. 1 µs	max. 1 µs	max. 200 ns
Falling edge time t_f		max. 1 µs	max. 1 µs	max. 200 ns
Short circuit proof outputs		yes	yes	yes

Terminal assignment

Output circuit	Type of connection	Cable (isolate unused cores individually before initial start-up)						
1, 3 without inv. signal	1, 2, A, B	Signal:	0 V	+V	A	B	0	
		Core color:	WH	BN	GN	YE	GY	

Output circuit	Type of connection	Cable (isolate unused cores individually before initial start-up)								
2, 4, 6 with inv. signal	1, 2, A, B	Signal:	0 V	+V	A	$\overline{A}$	B	$\overline{B}$	0	$\overline{0}$
		Core color:	WH	BN	GN	YE	GY	PK	BU	RD

+V: Supply voltage encoder <+V DC
0 V: Supply voltage encoder ground GND (0 V)
A, $\overline{A}$: Incremental output channel A
B, $\overline{B}$: Incremental output channel B
0, $\overline{0}$: Reference signal

1) Max. recommended cable length 30 m [98.4'].
2) With 24 V DC there is no tolerance above 24 V DC. Please use output circuit 8 ... 30 V DC.
3) Also for protection level IP64 on the shaft.

Miniature optical	2400 / 2420 (shaft / hollow shaft)	Push-pull, RS422

Dimensions shaft version

Dimensions in mm [inch]

Flange type 1, ø 24 [0.94]

1 min R50 [1.97]

2 3 x M3, 4 [0.16] deep

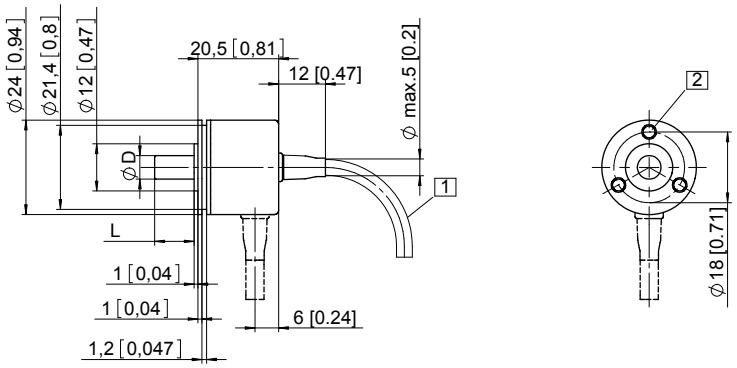

D	Fit	L
4 [0.16]	f7	10 [0.39]
5 [0.20]	f7	10 [0.39]
6 [0.24]	f7	10 [0.39]
1/4“	f7	10 [0.39]

Flange type 2, ø 30 [1.18]
Flange type 3, ø 28 [1.10]

1 min R50 [1.97]

2 2 x M3, 4 [0.16] deep

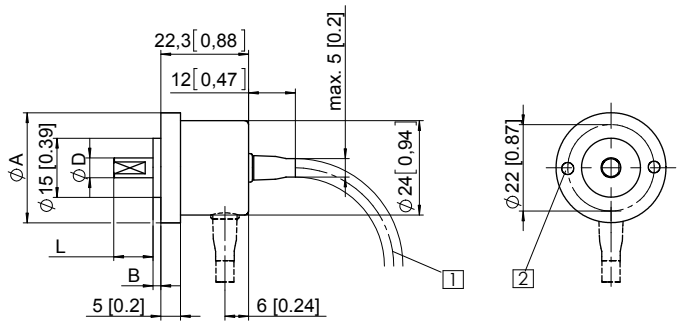

D	Fit	L
4 [0.16]	f7	10 [0.39]
5 [0.20]	f7	10 [0.39]
6 [0.24]	f7	10 [0.39]
1/4“	f7	10 [0.39]

Flange type	A	B
2	ø 30 [1.18]	3 [0.12]
3	ø 28 [1.10]	2 [0.08]

Dimensions hollow shaft version

Dimensions in mm [inch]

Flange type 1, ø 24 [0.94]

1 4 x M3 DIN 915 - SW1.5

Recommended torque for the set screw in the clamping ring 0.1 Nm.
To ensure optimal clamping by the clamping ring, the customer shaft should be without flat surface.

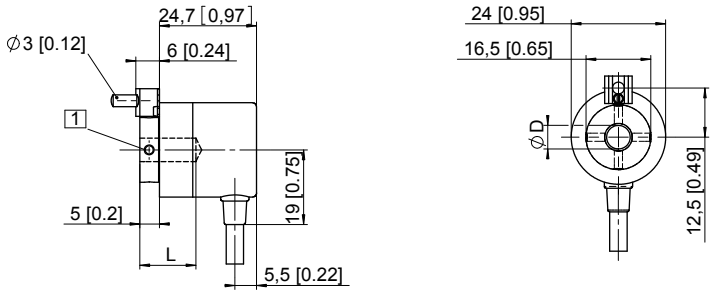

D	Fit	L
4 [0.16]	H7	14 [0.55]
6 [0.24]	H7	14 [0.55]
1/4“	H7	14 [0.55]
L = insertion depth max. blind hollow shaft		

Pobrano z: https://automatyka-sklep.eu/enkoder-inkrementalny-kubler-24-mm-z-otworem-4-mm-8-30vdc-25-impobr-push-pull-05-2420-1131-0025