| Miniature optical | 2400 / 2420 (shaft / hollow shaft) | Push-pull, RS422 |
|---|---|---|

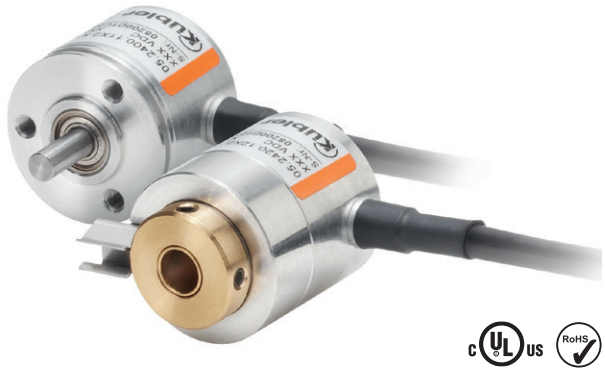

**The incremental miniature encoders type 2400 / 2420 with their optical sensor technology offer a resolution of up to 1024 pulses per revolution.**

**With a diameter of just 24 mm this encoder is ideal for use where space is tight.**

High rotational speed | Temperature range | Shock / vibration resistant | Short-circuit proof | Magnetic field proof | Optical sensor

## Reliable

- Robust bearing construction.
- Cable outlet boasts high degree of strain relief thanks to multiple clamping.
- Short-circuit proof outputs.

## Versatile

- Ideally suited for use in small devices.

## Order code Shaft version

| 05.2400 | . | X | X | X | X | . | XXXX |
|---|---|---|---|---|---|---|---|
| Type | | a | b | c | d | | e |

If for each parameter of an encoder the **underlined preferred option** is selected, then the delivery time will be 10 working days for a maximum of 10 pieces. Qts. up to 50 pcs. of these types generally have a delivery time of 15 working days.

10 by 10

**a** *Flange*
**1 = ø 24 mm [0.94“]**
3 = ø 28 mm [1.10“]
2 = ø 30 mm [1.18“]

**b** *Shaft (ø x L)*
**1 = ø 4 x 10 mm [0.16 x 0.39“]**
3 = ø 5 x 10 mm [0.20 x 0.39“], with flat
2 = ø 6 x 10 mm [0.24 x 0.39“]

4 = ø 1/4“ x 10 mm [1/4“ x 0.39“], with flat [1)]
6 = ø 6 x 10 mm [0.24 x 0.39“], with flat [1)]

**c** *Output circuit / supply voltage*
1 = push-pull (without inverted signal) / 5 ... 24 V DC
**2 = push-pull (with inverted signal) / 5 ... 24 V DC**
3 = push-pull (without inverted signal) / 8 ... 30 V DC
4 = push-pull (with inverted signal) / 8 ... 30 V DC
6 = RS422 (with inverted signal) / 5 V DC

**d** *Type of connection*
1 = axial cable, 2 m [6.56’] PVC
A = axial cable, special length PVC *)
**2 = radial cable, 2 m [6.56’] PVC**
B = radial cable, special length PVC *)

*) Available special lengths (connection types A, B): 3, 5, 8, 10, 15 m [9.84, 16.40, 26.25, 32.80, 49.21’] order code expansion .XXXX = length in dm ex.: 05.2400.122A.1024.0030 (for cable length 3 m)

**e** *Pulse rate*
4, 6, 8, 10, 16, 20, 25, 36, 40, 50, 60, 80, **100**, 120, 125, 180, **200**, 250, 300, **360**, 400, **500**, 512, **1000**, **1024**
(e.g. 360 pulses => 0360)

*Optional on request*
- other pulse rates

1) US version.

| Miniature optical | 2400 / 2420 (shaft / hollow shaft) | Push-pull, RS422 |
|---|---|---|

## Order code Hollow shaft

| 05.2420 | . | 1 | X | X | X | . | XXXX |
|---|---|---|---|---|---|---|---|
| Type | | a | b | c | d | | e |

If for each parameter of an encoder the **underlined preferred option** is selected, then the delivery time will be 10 working days for a maximum of 10 pieces. Qts. up to 50 pcs. of these types generally have a delivery time of 15 working days.

10 by 10

**a** *Flange*
**1 = ø 24 mm [0.94“]**

**b** *Blind hollow shaft*
*(insertion depth max. 14 mm [0.55“])*
1 = ø 4 mm [0.16“]
**2 = ø 6 mm [0.24“]**

4 = ø 1/4“ [1)]

**c** *Output circuit / supply voltage*
1 = push-pull (without inverted signal) / 5 ... 24 V DC
**2 = push-pull (with inverted signal) / 5 ... 24 V DC**
3 = push-pull (without inverted signal) / 8 ... 30 V DC
4 = push-pull (with inverted signal) / 8 ... 30 V DC
6 = RS422 (with inverted signal) / 5 V DC

**d** *Type of connection*
1 = axial cable, 2 m [6.56‘] PVC
A = axial cable, special length PVC *)
**2 = radial cable, 2 m [6.56‘] PVC**
B = radial cable, special length PVC *)

*) Available special lengths (connection types A, B):
3, 5, 8, 10, 15 m [9.84, 16.40, 26.25, 32.80, 49.21‘]
order code expansion .XXXX = length in dm
ex.: 05.2420.122A.1024.0030 (for cable length 3 m)

**e** *Pulse rate*
4, 6, 8, 10, 16, 20, 25, 36, 40, 50, 60, 80, **100**, 120, 125, 180, **200**, 250, 300, **360**, 400, **500**, 512, **1000**, **1024**
(e.g. 360 pulses => 0360)

*Optional on request*
- other pulse rates

| Mounting accessory for shaft encoders | | Order no. |
|---|---|---|
| **Coupling** | bellows coupling ø 15 mm [0.59“] for shaft 4 mm [0.16“] | **8.0000.1202.0404** |

Further Kübler accessories can be found at: kuebler.com/accessories
Further Kübler cables and connectors can be found at: kuebler.com/connection-technology

1) US version.

| Miniature optical | 2400 / 2420 (shaft / hollow shaft) | Push-pull, RS422 |
|---|---|---|

## Technical data

### Mechanical characteristics

| | | |
|---|---|---|
| **Maximum speed** | | 12000 $min^{-1}$ |
| **Mass moment of inertia** | | approx. 0.1 x $10^{-6}$ $kgm^2$ |
| **Starting torque** – at 20 °C [68 °F] | | < 0.01 Nm [3] |
| **Shaft load capacity** | radial | 20 N |
| | axial | 10 N |
| **Weight** | | approx. 0.06 kg [2.12 oz] |
| **Protection** acc. to EN 60529 | | |
| | housing side | IP65 |
| | flange side | IP50 (IP64 on request) |
| **Working temperature range** | | -20 °C ... +85 °C [-4 °F ... +185 °F] |
| **Materials** | shaft | stainless steel |
| | blind hollow shaft | brass |
| **Shock resistance** acc. to EN 60068-2-27 | | 1000 $m/s^2$, 6 ms |
| **Vibration resistance** acc. to EN 60068-2-6 | | 100 $m/s^2$, 55 ... 2000 Hz |

### Approvals

| | |
|---|---|
| **UL compliant** in accordance with | File no. E224618 |
| **CE compliant** in accordance with | |
| EMC Directive | 2014/30/EU |
| RoHS Directive | 2011/65/EU |

### Electrical characteristics

| **Output circuit** | | **Push-pull** [1] (7272 compatible) | **Push-pull** [1] (7272 compatible) | **RS422** (TTL compatible) |
|---|---|---|---|---|
| **Supply voltage** | | 5 ... 24 V DC [2] | 8 ... 30 V DC | 5 V DC (±5 %) |
| **Power consumption** (no load) | | max. 50 mA | max. 50 mA | max. 90 mA |
| **Permissible load / channel** | | max. +/- 50 mA | max. +/- 50 mA | max. +/- 20 mA |
| **Pulse frequency** | | max. 160 kHz | max. 160 kHz | max. 300 kHz |
| **Signal level** | HIGH | min. +V - 2.5 V | min. +V - 3.0 V | min. 2.5 V |
| | LOW | max. 0.5 V | max. 0.5 V | max. 0.5 V |
| **Rising edge time $t_r$** | | max. 1 µs | max. 1 µs | max. 200 ns |
| **Falling edge time $t_f$** | | max. 1 µs | max. 1 µs | max. 200 ns |
| **Short circuit proof outputs** | | yes | yes | yes |

### Terminal assignment

| Output circuit | Type of connection | Cable (isolate unused cores individually before initial start-up) | | | | | | |
|---|---|---|---|---|---|---|---|---|
| 1, 3 without inv. signal | 1, 2, A, B | Signal: | 0 V | +V | A | B | 0 | |
| | | Core color: | WH | BN | GN | YE | GY | |

| Output circuit | Type of connection | Cable (isolate unused cores individually before initial start-up) | | | | | | | | |
|---|---|---|---|---|---|---|---|---|---|---|
| 2, 4, 6 with inv. signal | 1, 2, A, B | Signal: | 0 V | +V | A | $\overline{A}$ | B | $\overline{B}$ | 0 | $\overline{0}$ |
| | | Core color: | WH | BN | GN | YE | GY | PK | BU | RD |

+V: Supply voltage encoder <+V DC
0 V: Supply voltage encoder ground GND (0 V)
A, $\overline{A}$: Incremental output channel A
B, $\overline{B}$: Incremental output channel B
0, $\overline{0}$: Reference signal

1) Max. recommended cable length 30 m [98.4'].
2) With 24 V DC there is no tolerance above 24 V DC. Please use output circuit 8 ... 30 V DC.
3) Also for protection level IP64 on the shaft.

| Miniature optical | 2400 / 2420 (shaft / hollow shaft) | Push-pull, RS422 |
|---|---|---|

## Dimensions shaft version

Dimensions in mm [inch]

**Flange type 1, ø 24 [0.94]**

1 min R50 [1.97]

2 3 x M3, 4 [0.16] deep

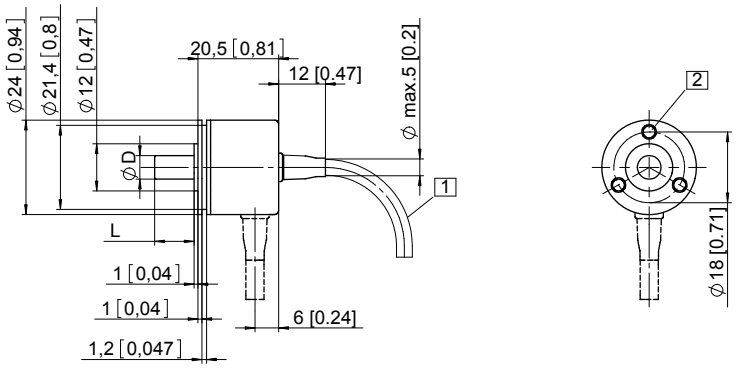


| D | Fit | L |
|---|---|---|
| 4 [0.16] | f7 | 10 [0.39] |
| 5 [0.20] | f7 | 10 [0.39] |
| 6 [0.24] | f7 | 10 [0.39] |
| 1/4“ | f7 | 10 [0.39] |

**Flange type 2, ø 30 [1.18]**
**Flange type 3, ø 28 [1.10]**

1 min R50 [1.97]

2 2 x M3, 4 [0.16] deep

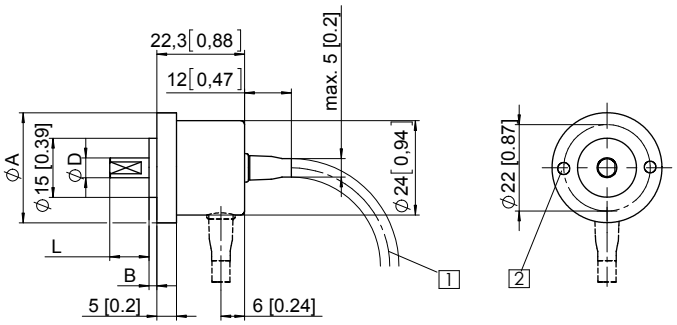


| D | Fit | L |
|---|---|---|
| 4 [0.16] | f7 | 10 [0.39] |
| 5 [0.20] | f7 | 10 [0.39] |
| 6 [0.24] | f7 | 10 [0.39] |
| 1/4“ | f7 | 10 [0.39] |

| Flange type | A | B |
|---|---|---|
| 2 | ø 30 [1.18] | 3 [0.12] |
| 3 | ø 28 [1.10] | 2 [0.08] |

## Dimensions hollow shaft version

Dimensions in mm [inch]

**Flange type 1, ø 24 [0.94]**

1 4 x M3 DIN 915 - SW1.5

Recommended torque for the set screw in the clamping ring 0.1 Nm.
To ensure optimal clamping by the clamping ring, the customer shaft should be without flat surface.

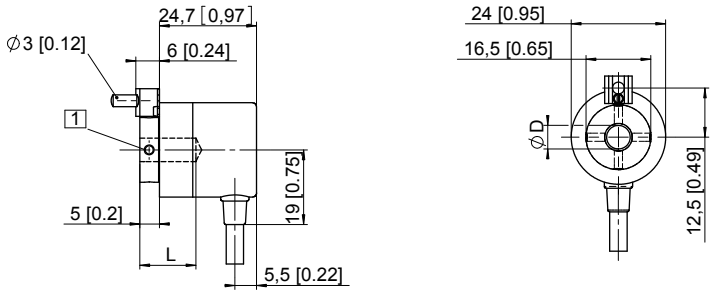


| D | Fit | L |
|---|---|---|
| 4 [0.16] | H7 | 14 [0.55] |
| 6 [0.24] | H7 | 14 [0.55] |
| 1/4“ | H7 | 14 [0.55] |
| L = insertion depth max. blind hollow shaft | | |

Pobrano z: https://automatyka-sklep.eu/enkoder-inkrementalny-kubler-30-mm-5-24-vdc-20-impobr-push-pull-05-2400-2311-0020